# User Guide

XPA Ultra Series

# XPA U 1004 SB and XPA U 2002 SB

Half-Rack Audio Power Amplifiers

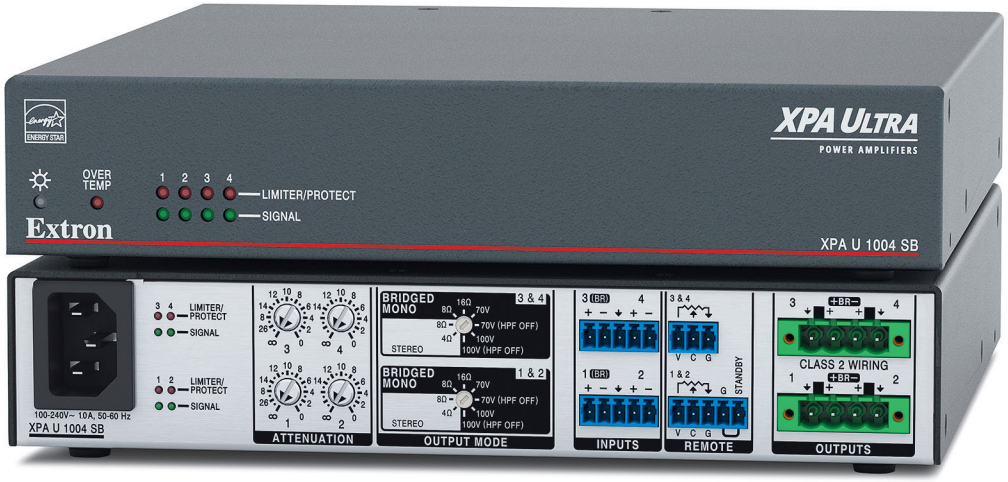

Extron

68-3579-01 Rev. A
02 21

# Safety Instructions

### Safety Instructions • English

**WARNING:** This symbol, ⚠, when used on the product, is intended to alert the user of the presence of uninsulated dangerous voltage within the product's enclosure that may present a risk of electric shock.

**ATTENTION:** This symbol, ⚠, when used on the product, is intended to alert the user of important operating and maintenance (servicing) instructions in the literature provided with the equipment.

For information on safety guidelines, regulatory compliances, EMI/EMF compatibility, accessibility, and related topics, see the Extron Safety and Regulatory Compliance Guide, part number 68-290-01, on the Extron website, **www.extron.com.**

### Sicherheitsanweisungen • Deutsch

**WARUNG:** Dieses Symbol ⚠ auf demProdukt soll den Benutzer darauf aufmerksam machen, dass im Inneren des Gehäuses dieses Produktes gefährliche Spannungen herrschen, die nicht isoliert sind und die einen elektrischen Schlag verursachen können.

**VORSICHT:** Dieses Symbol ⚠ auf dem Produkt soll dem Benutzer in der im Lieferumfang enthaltenen Dokumentation besonders wichtige Hinweise zur Bedienung und Wartung (Instandhaltung) geben.

Weitere Informationen über die Sicherheitsrichtlinien, Produkthandhabung, EMI/EMF-Kompatibilität, Zugänglichkeit und verwandte Themen finden Sie in den Extron-Richtlinien für Sicherheit und Handhabung (Artikelnummer 68-290-01) auf der Extron-Website, **www.extron.com**.

### Instrucciones de seguridad • Español

**ADVERTENCIA:** Este símbolo, ⚠, cuando se utiliza en el producto, avisa al usuario de la presencia de voltaje peligroso sin aislar dentro del producto, lo que puede representar un riesgo de descarga eléctrica.

**ATENCIÓN:** Este símbolo, ⚠, cuando se utiliza en el producto, avisa al usuario de la presencia de importantes instrucciones de uso y mantenimiento estas estan incluidas en la documentación proporcionada con el equipo.

Para obtener información sobre directrices de seguridad, cumplimiento de normativas, compatibilidad electromagnética, accesibilidad y temas relacionados, consulte la Guía de cumplimiento de normativas y seguridad de Extron, referencia 68-290-01, en el sitio Web de Extron, **www.extron.com**.

### Instructions de sécurité • Français

**AVERTISSEMENT :** Ce pictogramme, ⚠, lorsqu'il est utilisé sur le produit, signale à l'utilisateur la présence à l'intérieur du boîtier du produit d'une tension électrique dangereuse susceptible de provoquer un choc électrique.

**ATTENTION :** Ce pictogramme, ⚠, lorsqu'il est utilisé sur le produit, signale à l'utilisateur des instructions d'utilisation ou de maintenance importantes qui se trouvent dans la documentation fournie avec l'équipement.

Pour en savoir plus sur les règles de sécurité, la conformité à la réglementation, la compatibilité EMI/EMF, l'accessibilité, et autres sujets connexes, lisez les informations de sécurité et de conformité Extron, réf. 68-290-01, sur le site Extron, **www.extron.com**.

### Istruzioni di sicurezza • Italiano

**AVVERTENZA:** Il simbolo, ⚠, se usato sul prodotto, serve ad avvertire l'utente della presenza di tensione non isolata pericolosa all'interno del contenitore del prodotto che può costituire un rischio di scosse elettriche.

**ATTENTZIONE:** Il simbolo, ⚠, se usato sul prodotto, serve ad avvertire l'utente della presenza di importanti istruzioni di funzionamento e manutenzione nella documentazione fornita con l'apparecchio.

Per informazioni su parametri di sicurezza, conformità alle normative, compatibilità EMI/EMF, accessibilità e argomenti simili, fare riferimento alla Guida alla conformità normativa e di sicurezza di Extron, cod. articolo 68-290-01, sul sito web di Extron, **www.extron.com**.

### Instrukcje bezpieczeństwa • Polska

**OSTRZEŻENIE:** Ten symbol, ⚠, gdy używany na produkt, ma na celu poinformować użytkownika o obecności izolowanego i niebezpiecznego napięcia wewnątrz obudowy produktu, który może stanowić zagrożenie porażenia prądem elektrycznym.

**UWAGI:** Ten symbol, ⚠, gdy używany na produkt, jest przeznaczony do ostrzegania użytkownika ważne operacyjne oraz instrukcje konserwacji (obsługi) w literaturze, wyposażone w sprzęt.

Informacji na temat wytycznych w sprawie bezpieczeństwa, regulacji wzajemnej zgodności, zgodność EMI/EMF, dostępności i Tematy pokrewne, zobacz Extron bezpieczeństwa i regulacyjnego zgodności przewodnik, część numer 68-290-01, na stronie internetowej Extron, **www.extron.com**.

## Инструкция по технике безопасности • Русский

**ПРЕДУПРЕЖДЕНИЕ:** Данный символ, ⚠, если указан на продукте, предупреждает пользователя о наличии неизолированного опасного напряжения внутри корпуса продукта, которое может привести к поражению электрическим током.

**ВНИМАНИЕ:** Данный символ, ⚠, если указан на продукте, предупреждает пользователя о наличии важных инструкций по эксплуатации и обслуживанию в руководстве, прилагаемом к данному оборудованию.

Для получения информации о правилах техники безопасности, соблюдении нормативных требований, электромагнитной совместимости (ЭМП/ЭДС), возможности доступа и других вопросах см. руководство по безопасности и соблюдению нормативных требований Extron на сайте Extron: , **www.extron.com**, номер по каталогу - 68-290-01.

## 安全上のご注意 • 日本語

**警告:** この記号 ⚠ が製品上に表示されている場合は、筐体内に絶縁されていない高電圧が流れ、感電の危険があることを示しています。

**注意:** この記号 ⚠ が製品上に表示されている場合は、本機の取扱説明書に記載されている重要な操作と保守(整備)の指示についてユーザーの注意を喚起するものです。

**경고:** 이 기호 ⚠ 가 제품에 사용될 경우, 제품의 인클로저 내에 있는 접지되지 않은 위험한 전류로 인해 사용자가 감전될 위험이 있음을 경고합니다.

**주의:** 이 기호 ⚠ 가 제품에 사용될 경우, 장비와 함께 제공된 책자에 나와 있는 주요 운영 및 유지보수(정비) 지침을 경고합니다.

## 安全说明 • 简体中文

**警告:** ⚠产品上的这个标志意在警告用户, 该产品机壳内有暴露的危险电压, 有触电危险。

**注意:** ⚠产品上的这个标志意在提示用户, 设备随附的用户手册中有重要的操作和维护(维修)说明。

关于我们产品的安全指南、遵循的规范、EMI/EMF 的兼容性、无障碍使用的特性等相关内容，
敬请访问 Extron 网站，**www.extron.com**，参见 Extron 安全规范指南，产品编号 68-290-01。

## 安全記事 • 繁體中文

**警告:** ⚠ 若產品上使用此符號，是為了提醒使用者，產品機殼內存在未隔離的危險電壓，可能會導致觸電之風險。

**注意** ⚠ 若產品上使用此符號，是為了提醒使用者，設備隨附的用戶手冊中有重要的操作和維護（維修）說明。

有關安全性指導方針、法規遵守、EMI/EMF 相容性、存取範圍和相關主題的詳細資訊，請瀏覽 Extron 網站：**www.extron.com**，然後參閱《Extron 安全性與法規遵守手冊》，準則編號 68-290-01。

## 안전 지침 • 한국어

안전 가이드라인, 규제 준수, EMI/EMF 호환성, 접근성, 그리고 관련 항목에 대한 자세한 내용은 Extron 웹 사이트(**www.extron.com**)의 Extron 안전 및 규제 준수 안내서, 68-290-01 조항을 참조하십시오.

**Copyright**
© 2021 Extron. All rights reserved. **www.extron.com**

**Trademarks**
All trademarks mentioned in this guide are the properties of their respective owners.
The following registered trademarks (®), registered service marks (SM), and trademarks (TM) are the property of RGB Systems, Inc. or Extron (see the current list of trademarks on the **Terms of Use** page at **www.extron.com**):

| Registered Trademarks (®) |
|---|
| Extron, Cable Cubby, ControlScript, CrossPoint, DTP, eBUS, EDID Manager, EDID Minder, eLink, Flat Field, FlexOS, Glitch Free, Global Configurator, Global Scripter, GlobalViewer, Hideaway, HyperLane, IP Intercom, IP Link, Key Minder, LinkLicense, LockIt, MediaLink, MediaPort, NAV, NetPA, PlenumVault, PoleVault, PowerCage, PURE3, Quantum, ShareLink, Show Me, SoundField, SpeedMount, SpeedSwitch, StudioStation, System *INTEGRATOR*, TeamWork, TouchLink, V-Lock, VideoLounge, VN-Matrix, VoiceLift, WallVault, WindoWall, XPA, XTP, XTP Systems, and ZipClip |
| **Registered Service Mark(SM) :** S3 Service Support Solutions |
| **Trademarks (TM)** |
| AAP, AFL (Accu-RATE Frame Lock), ADSP (Advanced Digital Sync Processing), Auto-Image, AVEdge, CableCover, CDRS (Class D Ripple Suppression), Codec Connect, DDSP (Digital Display Sync Processing), DMI (Dynamic Motion Interpolation), Driver Configurator, DSP Configurator, DSVP (Digital Sync Validation Processing), EQIP, Everlast, FastBite, Flex55, FOX, FOXBOX, IP Intercom HelpDesk, MAAP, MicroDigital, Opti-Torque, PendantConnect, ProDSP, QS-FPC (QuickSwitch Front Panel Controller), Room Agent, Scope-Trigger, SIS, Simple Instruction Set, Skew-Free, SpeedNav, Triple-Action Switching, True4K, True8K, Vector™ 4K, WebShare, XTRA, and ZipCaddy |

## FCC Class B Notice

**NOTE:** This device complies with part 15 of the FCC rules. Operation is subject to the following two conditions: (1) This device may not cause harmful interference, and (2) This device must accept any interference received, including interference that may cause undesired operation.

This equipment has been tested and found to comply with the limits for a Class B digital device, pursuant to part 15 of the FCC rules. These limits provide reasonable protection against harmful interference in a residential installation. This equipment generates, uses, and can radiate radio frequency energy and, if not installed and used in accordance with the instructions, may cause harmful interference to radio communications. There is no guarantee that interference will not occur. If this equipment does cause interference to radio or television reception, which can be determined by turning the equipment off and on, you are encouraged to try to correct the interference by one or more of the following measures:

- Reorient or relocate the receiving antenna.
- Increase the separation between the equipment and receiver.
- Connect the equipment into an outlet on a circuit different from that to which the receiver is connected.
- Consult the dealer or an experienced radio/TV technician for help.

In order to maintain compliance with FCC regulations, shielded cables must be used with this equipment. Operation with non-approved equipment or unshielded cables is likely to result in interference to radio and TV reception. The user is cautioned that changes and modifications made to the equipment without the approval of the manufacturer could void the user's authority to operate this equipment.

**NOTE:** For more information on safety guidelines, regulatory compliances, EMI/EMF compatibility, accessibility, and related topics see the **Extron Safety and Regulatory Compliance Guide** on the Extron website.

# Conventions Used in this Guide

## Notifications

The following notifications are used in this guide:

**CAUTION:** Risk of minor personal injury.
**ATTENTION :** Risque de blessure mineure.

**ATTENTION:** **Risk of property damage.**
**Risque de dommages matériels.**

**NOTE:** A note draws attention to important information.

**TIP:** A tip provides a suggestion to make working with the application easier.

# Specifications Availability

Product specifications are available on the Extron website, **www.extron.com**.

# Extron Glossary of Terms

A glossary of terms is available at **http://www.extron.com/technology/glossary.aspx**.

# Contents

**Introduction ..... 1**

About this Guide..... 1
Features ..... 2

**Installation ..... 4**

Mounting the XPA Ultra Series Amplifier..... 4
Tabletop Use ..... 5
UL Rack Mounting Guidelines..... 6
Rack Mounting ..... 5
Rack Ear Mounting ..... 5
Bridge Plate Rack Mounting ..... 6
Rack Shelf Mounting..... 7
Flexible Conduit Adapter Kit Installation ..... 8

**Operation..... 12**

Front Panel Features..... 12
Rear Panel Features ..... 13
Remote Standby Port..... 17

**Troubleshooting ..... 17**

Amplifier Fails to Exit Standby Mode Promptly ... 17
Amplifier Enters Standby Mode Too Early ..... 19
Limiter/Protect LED Warning Indicators ..... 19
Over Temp Indicator LED..... 19

**Extron Warranty ..... 20**

# Introduction

This section gives an overview of the Extron XPA Ultra Series: XPA U 1004 SB and XPA U 2002 SB Half-Rack Four-Channel/Two-Channel audio power amplifiers. Topics include:

- **About this Guide**
- **About the XPA U 1004 SB and XPA U 2002 SB**
- **Features**

## About this Guide

This guide describes the XPA U 1004 SB and XPA U 2002 SB Half Rack Four-Channel/Two-Channel audio power amplifiers and discusses how to install, configure, and operate them.

In this guide, the terms “unit”, “amplifier”, and “power amplifier” refer to the XPA U 1004 SB and XPA U 2002 SB.

## About the XPA U 1004 SB and XPA U 2002 SB

The Extron XPA U 1004 SB and XPA U 2002 SB are ENERGY STAR qualified four- and two-channel audio power amplifiers with flexible channel pairs that can drive 8 ohm, 4 ohm, 70 volt, or 100 volt loads. The XPA U 1004 SB’s two individually bridgeable pairs can deliver two 100 watt channels into low-impedance systems or one 200 watt channel into low- or high-impedance systems. The XPA U 2002 SB’s bridgeable output pair can deliver two 200 watt channels into low-impedance systems or one 400 watt channel into low- or high-impedance systems.

Output mode selection is made via a rear panel rotary switch for quick and easy setup. The convection-cooled, plenum-rated enclosures of the XPA U 1004 SB and XPA U 2002 SB don’t require empty rack spaces for ventilation and include rack mount hardware. They feature a highly efficient advanced Class D amplifier design with defeatable auto standby, fast wake up from standby, and patented Extron CDRS (Class D Ripple Suppression) technology. Remote volume and mute control is possible per channel pair from Extron VCM, VC, and select MediaLink controllers.

## Features

- **Selectable output modes per channel pair:**
  - **XPA U 1004 SB**
    - Two 100 watt channels into 8 ohms or 4 ohms
    - One 200 watt bridged channel into 70V or 100V, with or without HPF
    - One 200 watt bridged channel into 8 ohms or 16 ohms
    - — Allows this amplifier model to be used in a wide variety of system configurations
  - **XPA U 2002 SB**
    - Two 200 watt channels into 8 ohms or 4 ohms
    - One 400 watt bridged channel into 70V or 100V, with or without HPF
    - One 400 watt bridged channel into 8 ohms or 16 ohms
    - — Allows this amplifier model to be used in a wide variety of system configurations
- **ENERGY STAR® qualified amplifiers** — The XPA U 1004 SB and the XPA U 2002 SB are ENERGY STAR qualified and energy efficient amplifiers, conserving energy and reducing costs.
- **Extron Patented CDRS (Class D Ripple Suppression) Technology** — CDRS is an Extron pantented technology providing a smooth and clean audio waveform, and improving signal fidelity over Class D amplifier designs.
- CDRS eliminates the high frequency switching ripple characteristics of Class D amplifiers, a source of RF emissions which can interfere with sensitive AV equipment like wireless mircophones.
- Convection cooled and fanless operation - can be stacked without extra rack space for
- **ventilation** — The XPA U 1004 SB and the XPA U 2002 SB do not have internal fans or vents for cooling, ensuring quiet reliable operation. The units generate substantially less heat than conventional power amplifiers, making the XPA Ultra Series ideal for rack-mount applications where space is limited.
- See **Rack Mounting Ventilation Recommendations** on page 7.
- **Defeatable auto-standby with fast wake up** — The amplifiers meet ENERGY STAR qualification requirements with an auto-standby feature that automatically places the units into standby after 25 minutes of in activity; thereby dramatically reducing power consumption. The XPA U 1004 SB and XPA U 2002 SB quickly return to full power in less 100 ms upon signal detection, with minimal inrush current. Auto-standby can be disabled if required.
- **UL 2043 Plenum rated when used with the optional Flexible Conduit Adapter Kit/ AV equipment** — The XPA U 1004 SB and XPA U 2002 SB amplifiers meet UL 2043 when installed with the Flexible Conduit Adapter Kit, part # 70-228-02. The amplifiers must meet this requirement for heat and smoke release for installation within a plenum airspace. Above-the-ceiling placement conceals the amplifier to prevent theft, and it is convenient for installing when space inside the room is limited.
- **Remote volume and mute control per channel pair** — With Extron VCM, VC, and select MediaLink controllers.
- **All rated watts are usable with all channels driven** — With a XPA Ultra, designs can utilize 100% of the rated power.
- **Professional grade signal-to-noise and THD+N performance** — The XPA U 1004 SB and the XPA U 2002 SB both deliver professional grade performance, featuring 100 dB signal-to-noise ratio and THD+N of less than 0.1%.

- **Ultra low inrush current at power up - no need for power sequencing** — Allows multiple XPA Ultra amplifier to be powered on simultaneously without overloading power circuits. This eliminates the need for power sequencing.
- **Power factor correction - removes harmonic content on AC line** — The XPA U 1004 SB and XPA U 2002 SB features power factor correction technology that smooths out the high peak currents of the amplifier's current draw, minimizing the presence of high frequency harmonics on the AC power line, preventing audible artifacts from being transmitted to other audio equipment in the system.
- **Rear panel recessed, detented level controls** — Provides attenuation of input signal for adjusting audio system gain staging. These controls are lcoated on the rear panel to prevent tampering with the level adjustments. Laser etched markings provide enhanced visibility of settings for ease of configuration.
- **Remote standby port** — Enables the XPA U 1004 SB and XPA U 2002 SB to be remotely powered down when not in use, reducing operating cost.
- **Automatic clip limiter** — Detects actual onset of clipping. Gain is automatically reduced without audible artifacts to prevent clipping distortion.
- **Multiple protection circuits** — Activate during output shorts, thermal overload, or DC faults to prevent damage to the amplifier and speakers.
- **5 mm screw-lock captive screw speaker connectors** — Enable simple, secure connections with 22 to 12 AWG speaker cables.
- **Front and rear-mounted signal and protection indication LEDs** — Provide convenient indication of input signal presence and protection circuit activation from both sides of an equipment rack.
- **Front panel over-temperature LED** — Provides visual indication that the amplifier's temperature has exceeded the optimal value, well in advance of the onset of thermal protection circuitry.
- **Internal Extron Everlast™ power supply** — Provides worldwide power compatibility, with high-demonstrated reliability and low power consumption for reduced operating cost.
- **Extron Everlast Power Supply is covered by a 7-year parts and labor warranty.**

# Installation

This section describes the installation and setup of the XPA U 1004 SB and XPA U 2002 SB.

Topics include:

- **Mounting the XPA Ultra Series Amplifiers**
- **Flexible Conduit Adapter Kit Installation**

## Mounting the XPA Ultra Series Amplifiers

The XPA U 1004 SB and XPA U 2002 SB can be mounted in a rack using rack ears, mounted on a rack shelf, set on a table, or mounted in the plenum space above a ceiling-mounted projector. Also, two amplifiers can be connected using the bridging plate to create a full rack-width unit.

This guide uses images of the XPA U 1004 SB to describe installation, but both amplifiers are installed the same way.

### Tabletop Use

Four self-adhesive rubber are included. Attach one foot at each corner on the bottom side of the amplifier and place the unit in a desired location.

### UL Rack Mounting Guidelines

The following Underwriters Laboratories (UL) guidelines pertain to the safe installation of the equipment in a rack.

- **Elevated operating ambient temperature** — If the equipment is installed in a closed or multi-unit rack assembly, the operating ambient temperature of the rack environment may be greater than room ambient temperature. Therefore, install the equipment in an environment compatible with the maximum ambient temperature (TMA = +32° F to +122° F (0° C to +50° C)/ 10% to 90%, noncondensing) specified by Extron.
- **Reduced air flow** — Install the equipment in a rack so the amount of air flow required for safe operation of the equipment is not compromised.
- **Mechanical loading** — When mounting the equipment in the rack, ensure uneven mechanical loading does not cause a hazardous condition.
- **Circuit overloading** — When connecting the equipment to the supply circuit, consider the effect circuit overloading might have on overcurrent protection and supply wiring. Consider equipment nameplate ratings when addressing this concern.
- **Reliable earthing (grounding)** — Maintain reliable grounding of rack-mounted equipment. Pay particular attention to supply connections other than direct connections to the branch circuit (for example, use of power strips).

## Rack Mounting

The XPA U 1004 SB and XPA U 2002 SB can both be mounted onto a rack using one of the following methods.

### Rack Ear Mounting

The XPA U 1004 SB and XPA U 2002 SB ship with a set of rack ears, so that the half rack-width amplifiers can be installed in a full rack-width space.

**Mount the amplifier with the rack ears by doing the following:**

1. Remove the rubber feet from the bottom of the amplifier if previously installed.
2. Attach the included rack ears to the sides of the amplifier with the four provided #6 machines screws (❶).

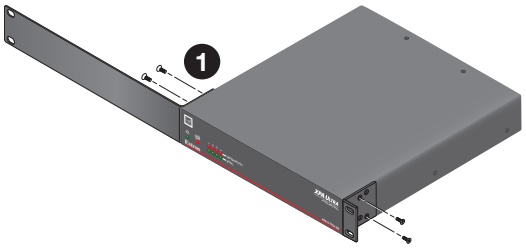


**Figure 1. Installing XPA Ultra Rack Ears**

3. Insert the amplifier into the rack and align the holes in the rack ear with the holes on the rack.
4. Secure the amplifier to the rack using four provided 10-32 x 3/4” screws (see figure 2, ❷).

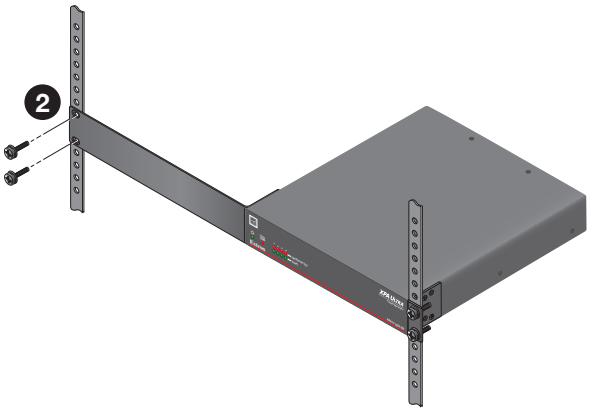


**Figure 2. Secure XPA Ultra Amplifier to Rack**

### Bridge Plate Rack Mounting

The XPA U 1004 SB and XPA U 2002 SB ships with a bridge plate connector to allow two amplifiers to be connected together and form a full rack-width unit.

**Mount two XPA Ultra Series amplifiers by doing the following:**

1. If the rubber feet are installed on the bottom of the amplifier, remove them.
2. Position two amplifiers upside down and next to each other.
3. Use the bridge plate connector and the four provided #4 machine screws to connect the two amplifiers together (see figure 3, ❶).
4. Attach the two short rack ears to the amplifiers with four provided #6 machine screws (❷).

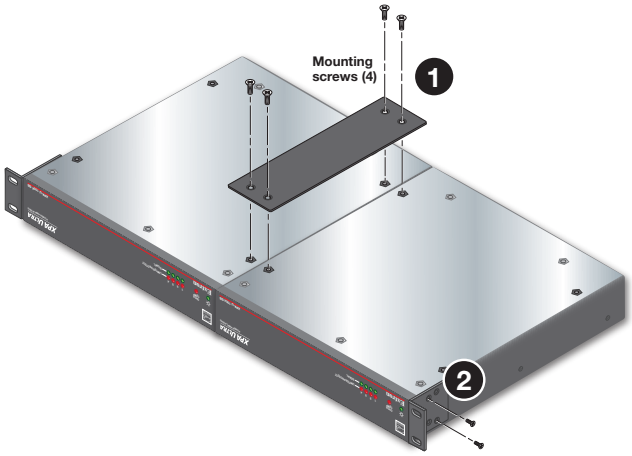


**Figure 3.** **Installing XPA Ultra Series Bridge Plate**

5. Insert the amplifiers into the rack and align the holes in the rack ears with the holes in the rack.
6. Secure the amplifiers to the rack using four provided 10-32 3/4” screws (see figure 4, ❸)

**Figure 4.** **Secure Connected XPA Ultra Amplifiers to Rack**

## Rack Shelf Mounting

The XPA U 1004 SB and XPA U 2002 SB can both be mounted in a shelf using the optional RSU 129 1U Universal Rack Shelf Kit.

**Mount the amplifier with the shelf as follows:**

1. If the rubber feet are installed on the bottom of the amplifier, remove them.
2. Place the amplifier on one half of the rack shelf.
3. Align the front of the amplifier with the front of the shelf, and align the threaded holes on the bottom of the amplifier with the holes in the rack shelf.
4. Attach the amplifier to the rack shelf with the two provided 4-40 x 3/16” machine screws. Fasten them into diagonally opposite corners by inserting the screws from the underside of the shelf.
5. Either attach the false front panel, which is provided with the rack shelf, to the unoccupied side of the rack, or install a second half rack-width device to that side. Repeat steps 1 through 5 if a second device is being installed.

6. Attach the rack to the shelf by using the four 10-32 x 3/4” screws provided with the shelf. Insert the screws through #10 beveled washers, then through the holes in the rack (see Figure 5, below).

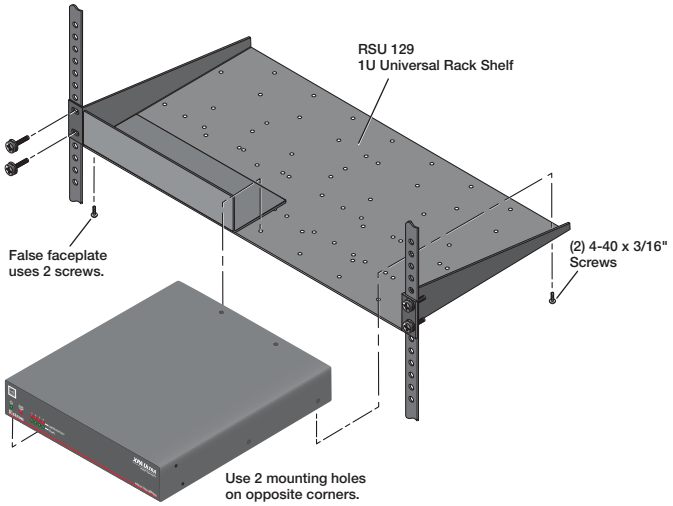


**Figure 5. Mounting the Amplifier onto a Rack Shelf**

**ATTENTION:**

- Using screws longer than 3/16” will damage the unit and void the warranty.
- L’utilisation de vis plus longues que 3/16” endommagera l’unité et annulera la garantie.

## Rack Mounting Ventilation Recommendations

Excessive heat decreases the optimal lifetime of the power amplifier. An Over Temp indicator LED on the front panel of the amplifier lights red whenever the recommended operating temperature has been exceeded.

The XPA Ultra amplifiers need to be arranged in a rack environment, so that the environment around the amplifier does not reach or go beyond +122 °F (+50 °C). No more than four amplifiers should be stacked vertically without an open space in between, as seen in figure 6.

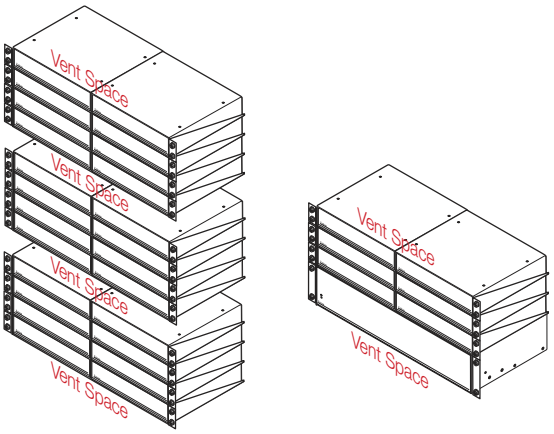


**Figure 6. Vent Space Example**

The XPA Ultra amplifiers can be arranged above or below another non-XPA Ultra device. The environment around the amplifier should still not reach or go beyond +122 °F (+50 °C).

## Flexible Conduit Adapter Kit Installation

**⚠WARNING :**
**AVERTISSEMENT :**

- The circuit breaker used for this connection should be rated no lower than 20 amps and no greater than 30 amps.
- Le disjoncteur utilisé pour cette connexion devrait avoir une cote comprise entre 20 et 30 amps.

- This unit must be installed in accordance with the National Electrical Code and with all local codes.
- Cet appareil doit être installé conformément au National Electrical Code et à tous les codes locaux.

- An **ALL-POLE MAINS SWITCH** with a contact separation of at least 3 mm in each pole shall be incorporated in the electrical installation of the building, The installation shall be carried out in accordance with all applicable installation rules.
- Un interrupteur omnipolaire avec une séparation contact d'au moins 3 mm dans chaque pôle, devra être incorporée dans l'installation électrique du bâtiment. L'installation doit être réalisée conformément à toutes les règles d'installation applicables.

- Installation and service must be performed by a qualified electrician only.
- L'installation et l'entretien doivent être effectués uniquement par un électricien qualifié.

- Make sure the source device and the XPA are turned off and disconnected from the power source before you begin.
- Vérifiez que l'appareil source et le périphérique source sont éteints et déconnectés de la source d'alimentation avant de commencer.

- To reduce the risk of fire or electric shock, do not expose this apparatus to rain or moisture.
- Afin de réduire les risques d'incendie ou de choc électrique, protégez cet appareil de la pluie ou de l'humidité.

- The product is a Class I product, which must be connected only to a mains socket outlet with a protective earthing (grounding) connection.
- Ce produit est un produit de Classe I, qui doit être connecté seulement à une prise femelle secteur équipée d'une connexion de mise à la terre.

- The mains plug/appliance coupler is used as the disconnect device and shall remain readily operable.
- La fiche secteur / le coupleur d'appareil est utilisé comme dispositif de déconnexion et doit rester facilement utilisable.

**ATTENTION:**

- A UL-Listed electrical distribution box is recommended for the termination of the conduit opposite the PS 124 power supply or the XPA amplifier. See **UL Requirements** below.
- Un boîtier de distribution électrique certifié UL est recommandé pour la terminaison du conduit à l'opposé de l'alimentation PS 124 ou de l'amplificateur XPA. Voir **"UL Requirements" on page 9**.

The optional Flexible Conduit Adapter Kit includes the following parts:

- One conduit adapter plate (pre-attached), for PS 124 and XPA Series amplifiers
- One conduit adapter plate for XPA Ultra Series and NetPA Ultra Series amplifiers (not attached)

- One 6 foot long electrical conduit
- Three 7.5 foot, 18-gauge power wires with spade connectors
- Three auxiliary crimp-style spade connectors designed for 14- to 16-gauge wires
- One UL-rated zip tie wrap

The kit provides a way to replace the IEC power cord with a conduit, where required by local codes.

**NOTE:** If needed, Extron recommends using a UL-rated crimp tool to terminate the spade connectors. One recommended choice is the Molex crimp tool.

## UL Requirements

The Underwriters Laboratories (UL) requirements listed below pertain to the installation of the flexible conduit onto an XPA U 1004 SB and XPA U 2002 SB.

- This unit must not be used beyond its rated voltage range.
- This unit must be wired to a UL-Listed distribution box.

**NOTE:** The UL-approved electrical distribution box is not included with either the XPA Ultra or the Flexible Conduit Adapter Kit. The installer is responsible for obtaining and installing the box.

## Installing the Flexible Conduit Adapter Kit

**WARNING:** Electrostatic discharge (ESD) can damage IC chips even though you cannot feel it. You must be electrically grounded before touching anything inside the XPA. A grounding wrist strap is recommended.

**AVERTISSEMENT :** Les décharges électrostatiques peuvent endommager les puces de circuit même si vous ne pouvez pas les sentir. Vous devez être électriquement relié à la terre avant de toucher un élément à l'intérieur du XPA. Un braceletde mise à la terreest recommandé.

**Install the flexible conduit to the XPA Ultra Amplifier as follows:**

1. Unplug the IEC power cord from the amplifier.
2. Remove the 8 screws from the top, sides, and bottom of the amplifier then slide and lift the cover off.

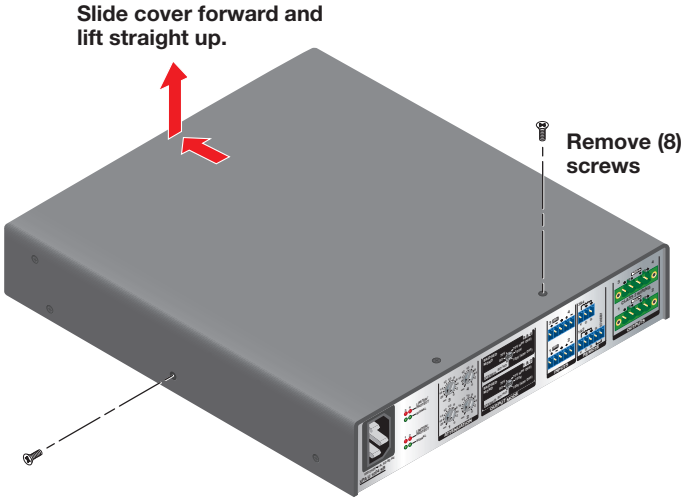


**Figure 7. Removing the Cover**

3. Remove the two screws holding the blue hot line and the brown neutral wires from the terminal block on the PCB. Put the screws to the side to be used later (see **figure 8** on page 10).
4. Remove the ground wire nut from the grounding stud located on the bottom of the enclosure as shown in **figure 8,** below. Place the nut with the other screws to be used later.
5. Remove the wires attached to the IEC connector from the body of the amplifier, and slide the IEC connector and wire up and out of the amplifier's enclosure (see **figure 8**, below).

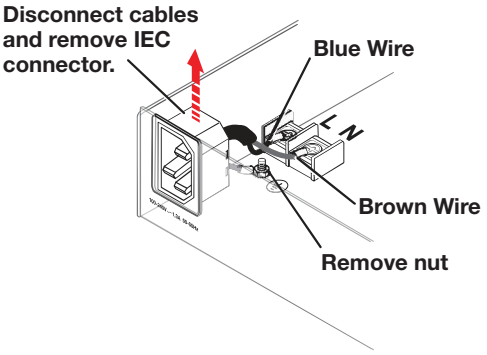


**Figure 8. Removing the IEC Connector**

6. Remove the washer at the end of the conduit (see Washer-B in figure 9), and remove the conduit adapter plate that ships attached to the conduit.

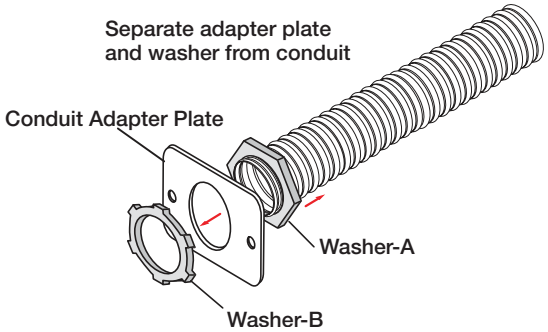


**Figure 9. Removing the Existing Adapter Plate**

7. Place the adapter plate that ships with the conduit kit on the conduit itself with the flat side of the plate facing the hexgonal nut, and secure the new plate to the conduit with the washer that was removed in step 6 (see figure 10).

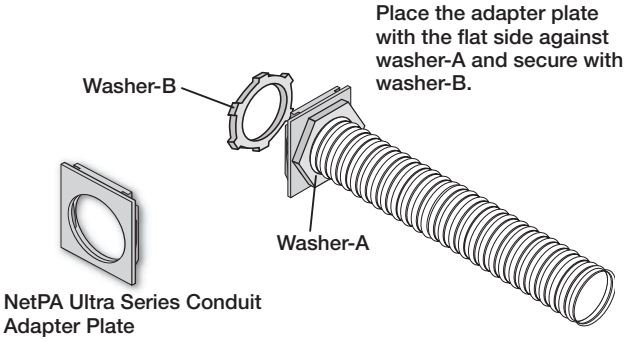


**Figure 10. Secure XPA Ultra Series Adapter Plate to Conduit**

8. Thread the blue, brown, and green 18-gauge power wires that are included with the flexible conduit adapter kit through the length of the electrical conduit.

9. Install the conduit with the new conduit plate attached into the opening from where the IEC connector removed in step 5 (see **figure 8** on page 10).

10. Connect the blue hot (line) and the brown neutral wires to the terminal block on the PCB using the two screws removed back in step 3. Use the included zip tie wrap to secure the two wires together close to the terminals (see figure 11).

> ⚠**WARNING:** Ensure that you observe correct wire polarity. The following illustration shows the location of the hot (line) and neutral terminals.
>
> **AVERTISSEMENT :** Respecter la polarité correcte des câble. L'illustration suivante indique l'emplacement des bornes de ligne et de neutre.

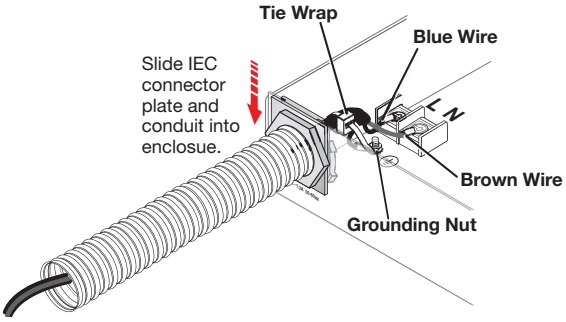


**Figure 11. Install the Conduit Assembly**

11. Connect the ground wire, as shown in figure 13 above, to the grounding stud located on the bottom of the enclosure using the nut removed in step **4.** Remove the ground wire nut from the grounding stud located on the bottom of the enclosure as shown in figure 11, above. Place the nut with the other screws to be used later.

12. Replace the cover of the XPA Ultra amplifier by reattaching the eight screws removed in step **2.** Remove the 8 screws from the top, sides, and bottom of the amplifier then slide and lift the cover off.

# Operation

This section describes the installation and setup of the XPA U 1004 SB and XPA U 2002 SB. Topics include:

- **Front Panel Features**
- **Rear Panel Features**
- **Troubleshooting**

## Front Panel Features

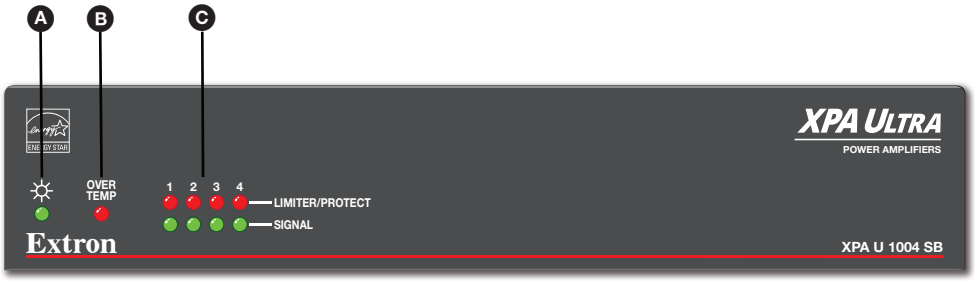

**A** Power/Standby Indicator **B** Over Temp Indicator **C** Channel Status LEDs

**Figure 12. XPA U 1004 SB and XPA U 2002 SB Front Panels**

**A** **Power/Standby LED** — A single LED that lights green when the unit is on and active, and lights amber when:

- The unit is in standby mode, which turns off all outputs from the amplifier although the amplifier still receives power.
- The unit will not come out of standby when DC voltage is detected. The amplifier only comes out of standby mode by either resetting the device or powering it down.

> **NOTE:** Power indicator LED may stay lit amber for a short time after removing the AC Power Supply. This is normal.

**B** **Over Temp Indicator** — A single LED that lights red when the amplifier has exceeded the maximum recommended operating temperature. The amplifier recovers once the unit has cooled down to below the maximum recommended operating temperature. Power limiting may occur, but it depends on the unit's temperature.

**C** **Channel Status LEDs** — (see **figure 12** on page 12) Two rows of LEDs that represent the amplifier's channels.

- **Limiter/Protect LED** — The LEDs lights red when the channel is in protection mode, which is triggered by any of the limiter protection circuits such as:
  - When the clip limiter is activiated due to excessive clipping.
  - When the output short circuits.
- **Signal LED** — The LEDs light green when the input signal is detected.

**NOTE:** The LEDs are also located on the rear panel.

## Rear Panel Features

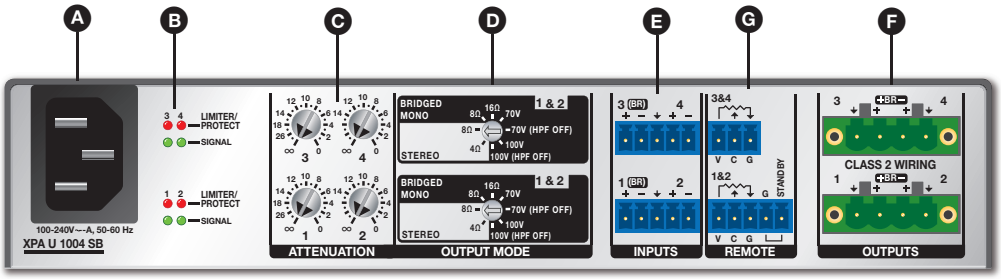


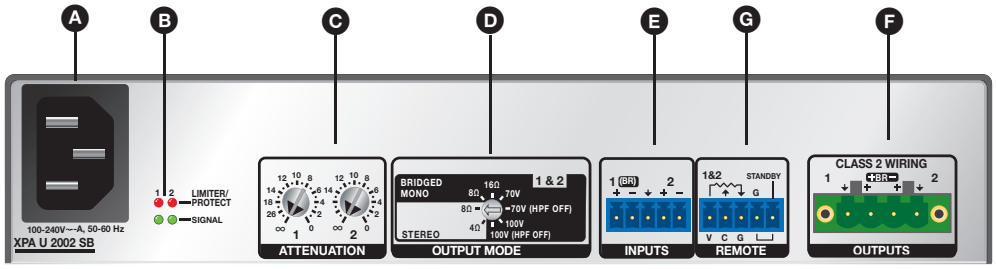


**A** **Removable IEC Power Receptacle** **B** **Channel Status LEDs** **C** **Attenuators** **D** **Output Mode Selector Switches**

**E** **Line Input** **F** **Speaker Output Connectors** **G** **Remote Ports**

**Figure 13. XPA U 1004 SB and XPA U 2002 SB Rear Panels**

**A** **Removable IEC Power Receptacle** — Connect the supplied IEC power cord here for power input (100 VAC to 240 VAC, 50-60 Hz) to the internal power supply. The connector can be replaced by a Flexible Conduit Adapter Kit (see **Flexible Conduit Adapter Kit Installation** on page 8).

**B** **Channel Status LEDs** — The 1004 SB has four double-stacked LEDs, while the 2002 SB has two double-stacked LEDs.
The top red LEDs indicate limiter/protect status, and the bottom green LEDs indicate signal status. These LEDs share the same function as the front panel LEDs.

**C** **Attenuators** — Use a small screwdriver to adjust the gain structure for a corresponding channel. Each channel has its own potentiometer, ranging from ∞ (full attenuation) to 0 dB (no attenuation)

To adjust the attenuation level on the amplifier, perform the following:

**When volume is controlled at the source:**

1. If connecting to a source device with volume control (variable output), ensure the volume on the source device is set to its lowest point, then adjust the attenuation of the amplifier fully counterclockwise.

2. Set the source device volume to the maximum level. No sound should come out.
3. Raise the attenuation on the XPA Ultra Series amplifier until sound distortion occurs, then lower the attenuation level slowly until distortion disappears. This setting ensures no clipping occurs, whatever the source device volume setting is.

> **NOTE:** When setting volume control through a source device, make sure the device's volume is set to variable out. Consult the device's user manual for detailed instructions on its calibration.

**When volume is controlled at the amplifier:**

1. If volume will be controlled at the amplifier using a remote volume control (see section G for details), ensure the volume on the source device is set to its lowest point, then adjust the attenuation of the amplifier fully counterclockwise.
2. Set the source device's volume to its maximum level.
3. Set the remote volume control to its maximum level. No sound should come out.
4. Raise the attenuation on the XPA Ultra Series amplifier until sound distortion occurs, then lower the attenuation level slowly until distortion disappears. This setting ensures no clipping occurs, whatever the source device volume setting is.

> **NOTE:** When volume will be controlled at the amplifier using a remote volume control, make sure the source device's audio output is set to fixed out (local volume control is disabled). Consult the device's user manual for detailed instructions on its calibration.

**Stereo 8Ω or 4Ω Output Modes**

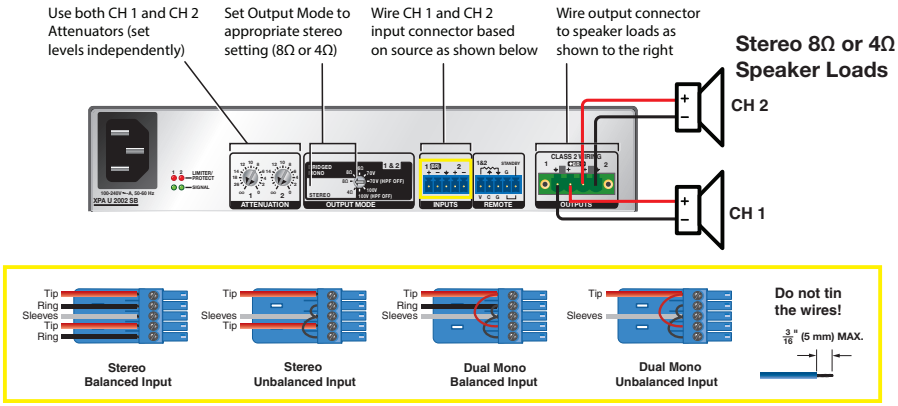


**Bridged Mono 8Ω/16Ω/70V/100V Modes**

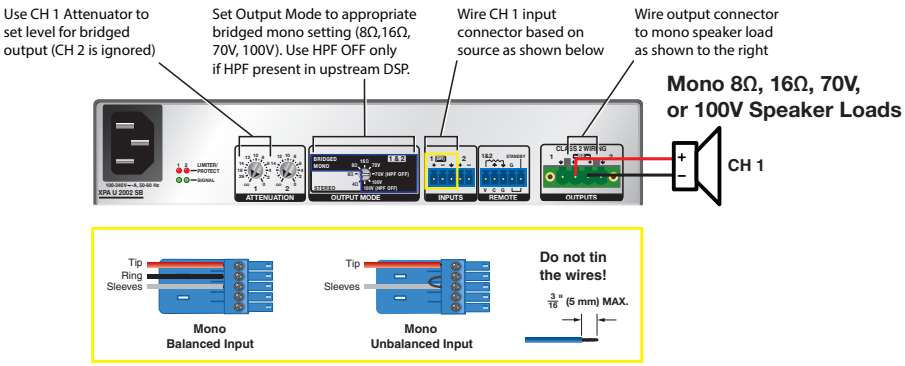


**Figure 14. XPA SB Configuration Based on Output Mode**

> **NOTE:** XPA U 2002 SB shown. Channels 3 and 4 of the XPA U 1004 SB are configured in the same way.

**D** **Output Mode Selector Switches** — (see **figure 14** on page 14) Each channel features a 8-position rotary switch to set the output mode for specific channels (see figure on the right). The bottom switch controls channels 1 and 2, and the XPA U 1004 SB has a top switch that controls channels 3 and 4. There are eight settings that are divided into stereo and bridged mono:

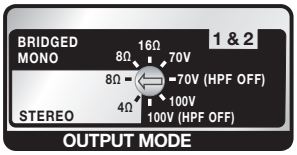


- **Stereo Mode (4 ohm/8 ohm)** — Each channel of a output pair behaves independently, and each input is routed to its respective output. A channel's level is set by its dedicated attenuator.
- **Bridged Mono Modes** — There are six bridged mono modes: two low-impedance (8 ohm and 16 ohm bridged) and four high-impedance (70V, 70V with no HPF, 100V, and 100V with no HPF)

  In all six mono modes, the outputs of a pair are bridged, and the lowest-numbered channel is fed to the pair's positive pins. The bridged output's positive pin is now the lowest-numbered channel's pin. And the higher-numbered output's positive pin becomes the bridged output's negative pin.

  The level is set by using the attenuator on the lowest-numbered channel. The higher-numbered channel's input and attenuator are not used in bridged mono mode.

  In either 70V or 100V modes, an 80 Hz, 12 dB/octave high-pass filter is applied to the signal. This can be disabled by selecting (HPF OFF) for either 70V or 100V mode. On 8 ohm and 16 ohm bridged modes, the filter is disabled.

  > **NOTE:** In 70V/100V output modes, HPF should be disabled at the amplifier only if a high-pass filter will be applied upstream of the amplifier.

**E** **Line Input** — (see **figure 14** on page 14) Wire the amplifier input connectors based on the output. See Figure 16 for details on how to wire the input connectors.

> **NOTE:** In bridged mono output modes, even-numbered channels are not used in the connector.

**F** **Speaker Output Connectors** — (see **figure 14** on page 14) Connect up to two 4-pin, 5mm captive screw connectors for up to four channels of speaker outputs. Each port has a screw flange to secure the plug to the connector. Observe the correct polarities for each channel as shown to the right.

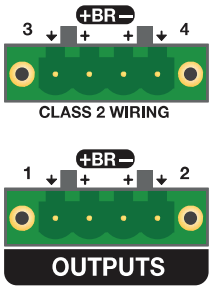

**⚠WARNING:**
**AVERTISSEMENT :**

- Do not tie channel output pins to each other or to ground. Doing so will short out the outputs, damage the amplifier, or both.
- Ne pas lier les sorties 1 et 2 des canaux entre elles ou à la terre. Les sorties pourraient être court-circuitées et/ou l'amplificateur pourrait être endommagé.
- To avoid risk of damage to the amplifier or the speakers, always connect low impedance speaker loads (8Ω/4Ω) and high-impedance speaker loads (70V) to the appropriately marked output connectors on the amplifier.
- Pour éviter tout risque de détérioration de l'amplificateur ou des enceintes, connectez toujours les charges de l'enceinte faible impédance (8 Ω/ 4 Ω) et les charges de l'enceinte haute impédance (70 V) aux connecteurs de sortie correctement identifiés sur l'amplificateur.

**NOTE:** You must use Class 2 wiring for this output to comply with UL requirements.

**To wire the stereo audio output, do the following steps:**

1. Strip and insert the speaker wires into the connector and tighten the captive screws.

   Make sure to observe correct polarity.

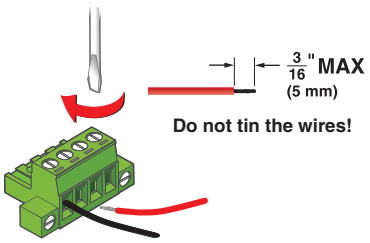


2. Insert the wired connector into the amplifier output, and secure the plug by tightening the screws on either side..

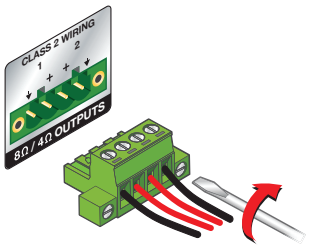


**G** **Remote Ports** — (see **figure 14** on page 14) On the XPA U 1004 SB, connect a 3-pole, 3.5mm captive screw connector for remote volume control on channels three and four. On both amplifiers, there is a 5-pole captive screw port. The bottom port use a 3-pin captive screw plug for volume control of channels 1 and 2 on the V, C, and G pins, and a 2-pin captive screw for standby on the STANDBY and G pins.

## Remote Volume Control Port

Pins V, C, and G (1, 2, and 3) control volume by varying the DC voltage from 0 V (full attenuation) to 10 V (maximum volume) with full muting in effect when pin C is connected to ground (pin G).

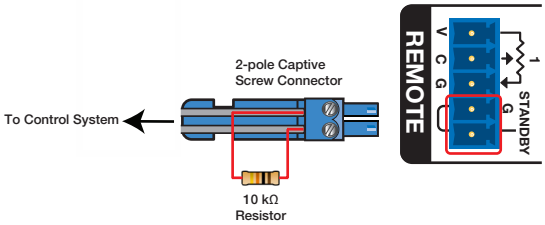

Options for remote control include the Extron VC 50, VCM 110 AAP, VCM 200 series, MLA VC10 Plus, and select MLC controllers. For information on these devices, including part numbers, go to **www.extron.com**. Third party 10k potentiometer volume controllers can also be used for remote volume and mute control (see figure above for details)

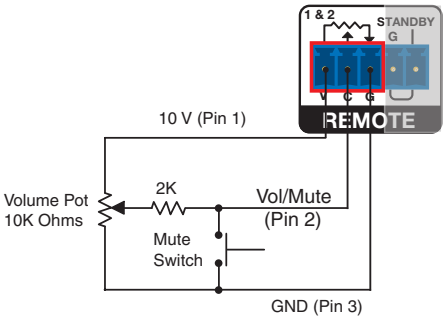


**Figure 15. Remote Volume Control Connector**

## Remote Standby Port

The 3.5 mm 2-pole captive screw port is used to remotely place the amplifier into standby.

Connecting the Standby pin to the Ground pin places the amplifier in standby mode. Standby mode turns off all output, although the amplifier is still receiving power. Use the included 3.5 mm 2-pole captive screw connector to remotely ground the Standby pin. The power indicator LED lights amber when the amplifier is in standby mode.

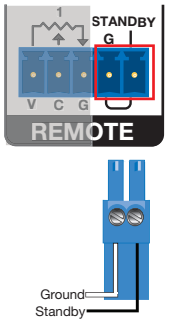


**Figure 16. Remote Standby Port**

The amplifier will automatically enter standby mode after 25-minutes of inactivity from a loss of signal. The inactivity timer can be disabled by wiring a 10 kΩ resistor between the Standby and Ground pins. The amplifier can still be forced into standby mode via the remote standy connector.

The following table summarizes the amplifier's behavior in various scenarios.

| Remote Port Action | Inactivity Timer Defeated | Time Since Last Detected Signal | |
|---|---|---|---|
| | | <25 min | >25 min |
| No action (open) | N | Amp remains active | Amp enters standby |
| Open to close | N | Amp enters standby | Amp remains in standby |
| Close to open | N | Amp becomes active; timer restarts | Amp becomes active; timer restarts |
| No action (open) | Y | Amp remains active | — |
| Open to close | Y | Amp enters standby | — |
| Close to open | Y | Amp becomes active | — |

# Troubleshooting

The front and rear panels have LED warning indicators, as described below.

## Amplifier Fails to Exit Standby Mode Promptly

The input channel signal LED lights green when an input signal is detected.

| Power LED Color | Signal LED State | Problem Description | Problem Solution |
|---|---|---|---|
| Amber | Not lit | No output signal | No input detected, verify the input signal. If input signal is present, raise input level until signal LED lights. |
| Green or Amber | Lit intermittently | Unit does not promptly exist standby mode when input signal is present | The output signal level of the source may be too low to cross the signal detection threshold of the amplifier (see amplifier specs for details). Increase the signal level of the source until the signal LED lights consistently, or defeat the standby timer. |
| Amber | Lit | No output signal | Ampilifer has been placed in standby mode and the output has been turned off. Check remote port. DC Fault may have been detected (see below). |
| Amber | Lit | DC Fault is detected. Unit does not exit standby. | Disconnect power then disconnect the remote port. Then, reconnect power to the unit to determine if the unit immediately goes into standby upon power up. In such a case, service the unit. |

## Amplifier Enters Standby Mode Too Early

The input channel signal LED lights green per indicated input channel when an input signal is detected.

| Power LED Color | Signal LED State | Problem Description | Problem Solution |
|---|---|---|---|
| Green or Amber | Lit intermittently | Enters standby mode early | The output signal level of the source may be too low to cross the signal detection threshold of the amplifier (see amplifier specs for details). Increase the signal level of the source until the signal LED lights consistently, or defeat the standby timer. |

## Limiter/Protect LED Warning Indicators

The output channel Limiter/Protect LED lights red per indicated output channel as shown in the following diagnostic information.

| LED State | Problem Description | Problem Solution |
|---|---|---|
| Blinks | Audio clipping is occurring at the rate of one blink per clip. | Reduce the power output to avoid overdriving the amplifier and causing clipping. |
| Lights steadily | The amplifier may be overheating. | Determine the reason for the overheated state and allow the amplifier to cool. The LED will not be lit after the amplifier recovers from the overheated state. |
| | Output channel leads are shorted. | Check speakers and speaker wiring for shorts. |

## Over Temp Indicator LED

This indicator does not represent a hard failure of the unit. It is a warning the amplifier has exceeded the recommended operating temperature for optimal product lifetime.

| LED State | Problem Description | Problem Solution |
|---|---|---|
| Lights steadily | Amplifier has exceeded the recommended operating temperature. The LED turns off after the amplifier cools down. | Verify the placement of the amplifier allows for sutible ventilation and airflow.<br>Avoid placing equipment on top or below the amplifier.<br>Verify the operating temperature is within the specified range. |

# Extron Warranty

Extron warrants this product against defects in materials and workmanship for a period of three years from the date of purchase. In the event of malfunction during the warranty period attributable directly to faulty workmanship and/or materials, Extron will, at its option, repair or replace said products or components, to whatever extent it shall deem necessary to restore said product to proper operating condition, provided that it is returned within the warranty period, with proof of purchase and description of malfunction to:

**USA, Canada, South America, and Central America:**
Extron
1230 South Lewis Street
Anaheim, CA 92805
U.S.A.

**Asia:**
Extron Asia Pte Ltd
135 Joo Seng Road, #04-01
PM Industrial Bldg.
Singapore 368363
Singapore

**Japan:**
Extron, Japan
Kyodo Building, 16 Ichibancho
Chiyoda-ku, Tokyo 102-0082
Japan

**Europe:**
Extron Europe
Hanzeboulevard 10
3825 PH Amersfoort
The Netherlands

**China:**
Extron China
686 Ronghua Road
Songjiang District
Shanghai 201611
China

**Middle East:**
Extron Middle East
Dubai Airport Free Zone
F13, PO Box 293666
United Arab Emirates, Dubai

**Africa:**
Extron South Africa
South Tower
160 Jan Smuts Avenue
Rosebank 2196, South Africa

This Limited Warranty does not apply if the fault has been caused by misuse, improper handling care, electrical or mechanical abuse, abnormal operating conditions, or if modifications were made to the product that were not authorized by Extron.

**NOTE:** If a product is defective, please call Extron and ask for an Application Engineer to receive an RA (Return Authorization) number. This will begin the repair process.

| | | | |
|---|---|---|---|
| **USA**: | 714.491.1500 or 800.633.9876 | **Asia**: | 65.6383.4400 |
| **Europe:** | 31.33.453.4040 or 800.3987.6673 | **Japan**: | 81.3.3511.7655 |
| **Africa:** | 27.11.447.6162 | **Middle East**: | 971.4.299.1800 |

Units must be returned insured, with shipping charges prepaid. If not insured, you assume the risk of loss or damage during shipment. Returned units must include the serial number and a description of the problem, as well as the name of the person to contact in case there are any questions.

Extron makes no further warranties either expressed or implied with respect to the product and its quality, performance, merchantability, or fitness for any particular use. In no event will Extron be liable for direct, indirect, or consequential damages resulting from any defect in this product even if Extron has been advised of such damage.

Please note that laws vary from state to state and country to country, and that some provisions of this warranty may not apply to you.